BF Series

100 to 300 GPM Bag Filters
Design and Component Specifications

BF100N

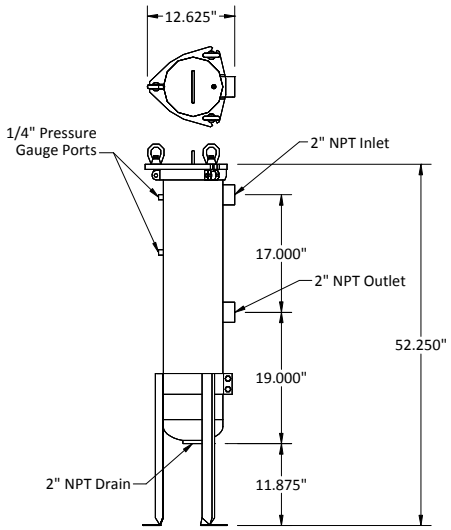

BF200N

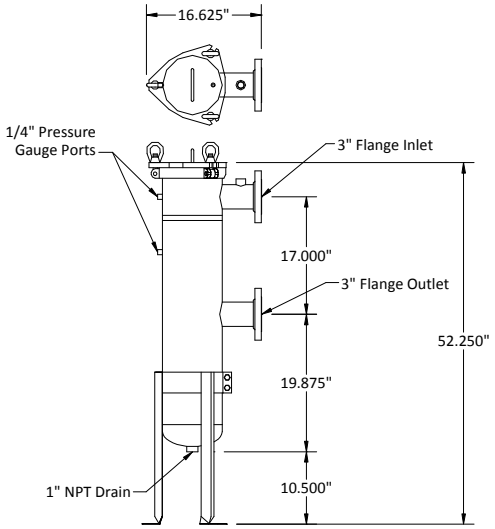

BF300N

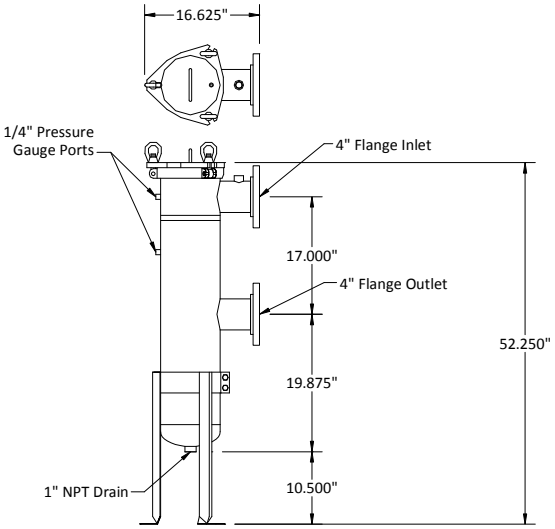

ModelNumber	Standard Filter Mesh	Weight (Pounds)
BF100N	60	140
BF200N	60	150
BF300N	60	160

7720 North Lehigh Avenue
Niles, Illinois 60714-3491
Tel: (847) 966-2260
Toll Free: (888) 828-7387
Fax: (847) 966-9358

Email: info@thermalcare.com
Website: www.thermalcare.com

Manufacturer reserves the right to change specifications or design without notice or obligation. Thermal Care is a registered trademark of MFRI, Inc.